SALINI

INDUCTION COOKTOP

User Manual & Installation

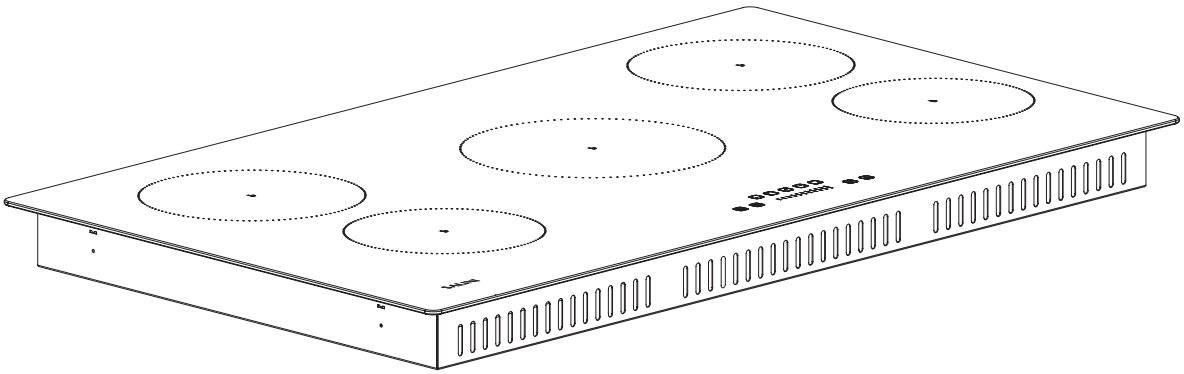

SCI-4155B

WWW.SALINI.COM.AU

TABLE OF CONTENTS

Safety Warnings 1

Description of the Appliance 3-4

Using your Appliance 5-9

Installation 10-13

Before Using the Appliance 14-15

Cleaning & Maintenance 16-18

Troubleshooting 18-20

Technical Specifications 20

Declaration of Conformity 21

⚠ Installation of the appliance must only be undertaken by a licensed electrician.

This manual contains important information including safety, operational & installation information which will enable you to get the most out of your appliance. Please keep it in a safe place so that it is easily available for future reference; for you or any person not familiar with the operation of the appliance.

SAFETY WARNINGS

Please read the following instructions carefully before using the appliance.

- Check the appliance for damage after unpacking it. Do not connect or install the appliance if it has been damaged in transport as this will void the warranty.
- IMPORTANT! Your product warranty will be void if the installation is not in accordance with the instructions. The installation must be carried out by a suitably qualified person, in accordance with the manufacturer's instructions, and must be connected in accordance with all applicable electrical regulations.
- This appliance is designed for domestic household use.
- The use of this appliance for any other purpose or in any other environment will void warranty.
- Your new appliance is guaranteed against electrical or mechanical defects, subject to certain exclusions, the foregoing does not affect your statutory rights.
- Repairs may only be carried out by Service Engineers or an authorised service agent.
- Disconnect the appliance from the mains electricity supply before carrying out any work maintenance on it.
- Connection to a good earth wiring system is essential and mandatory.
- Means for disconnection must be incorporated in the fixed wiring in accordance with the wiring rules.
- Alterations to the domestic wiring system must only be undertaken by a qualified electrician. Failure to follow this advice may result in electrical shock or death.
- Take care - panel edges are sharp. Failure to use caution could result in injury or cuts.
- No combustible material or products should be placed on this appliance at any time.
- **WARNING:** Use only hob guards designed by the manufacturer of the cooking appliance or indicated by the manufacturer of the appliance in the instructions for use as suitable or hob guards incorporated in the appliance. The use of inappropriate guards can cause accidents.
- Failure to install the appliance correctly could invalidate any warranty or liability claims.
- Do not cook on a broken or cracked cooktop. If the cooktop surface has a break or crack, switch the appliance off immediately at the mains power supply (wall switch) and contact a qualified technician. Failure to use caution could result in injury or cuts.
- Switch the cooktop off at the wall before cleaning or maintenance. Failure to follow this advice may result in electrical shock or death.
- This appliance complies with electromagnetic safety standards.
- During use, accessible parts of this appliance will become hot enough to cause burns.
- Do not let your body, clothing or any item other than suitable cookware contact the ceramic glass until the surface is cool.
- Metallic objects such as knives, forks, spoons and lids should not be placed on the hob surface since they can get hot.
- Children should be kept away unless continuously supervised.

- Handles of saucepans may be hot to touch. Check saucepan handles do not overhang other cooking zones that are on. Keep handles out of reach of children.
- Failure to follow this advice could result in burns and scalds.
- Never leave the appliance unattended when in use. Boil over causes smoking and greasy spillovers that may ignite.
- Never use your appliance as a work or storage surface.
- Never leave any objects or utensils on the appliance.
- Never use your appliance for warming or heating the room.
- After use, always turn off the cooking zones.
- Do not allow children to play with the appliance or sit, stand, or climb on it.
- Do not store items of interest to children in cabinets above the appliance. Children climbing on the cooktop could be seriously injured.
- Do not leave children alone or unattended in the area where the appliance is in use.
- Children or persons with a disability which limits their ability to use the appliance should have a responsible and competent person to instruct them in its use. The instructor should be satisfied that they can use the appliance without danger to themselves or their surroundings.
- Do not repair or replace any part of the appliance unless specifically recommended in the manual. All other servicing should be undertaken by a qualified technician.
- Do not use pans with jagged edges or drag pans across the glass surface as this can scratch the glass.
- Do not use scourers or any other harsh abrasive cleaning agents or tools to clean your cooktop as they can damage the surface.
- If the supply cord is damaged, it must be replaced by the manufacturer, its service agent or similarly qualified persons to avoid a hazard.
- This appliance is intended to be used in a domestic household environment only. Commercial use of any kind is not covered under the manufacturer's warranty.
- **WARNING:** The appliance and its accessible parts become hot during use.
- Care should be taken to avoid touching heating elements.
- Children shall not play with the appliance. Cleaning and user maintenance shall not be undertaken by children without supervision.
- **WARNING:** Unattended cooking on a hob with fat or oil can be dangerous and may result in fire. NEVER try to extinguish a fire with water, switch off the appliance and then cover flame e.g. with a lid or a fire blanket.
- **WARNING:** Danger of fire: do not store items on the cooking surfaces.
- **WARNING**: If the surface is cracked, switch off the appliance to avoid the possibility of electric shock.
- Do not use a steam cleaner to clean appliance.
- The appliance is not intended to be operated by means of an external timer or separate remote control system.
- **CAUTION**: Cooking on the appliance must be supervised continuously.

DESCRIPTION OF THE APPLIANCE

Top View

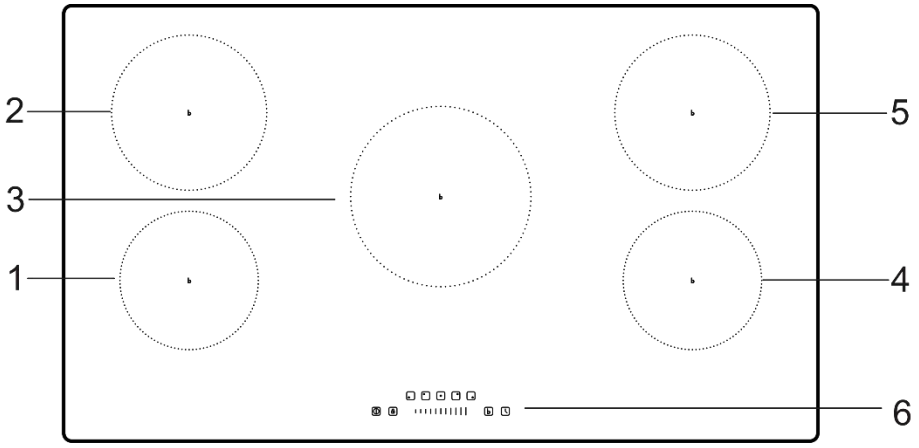

1. Max 1500W Zone
2. Max 2100W Zone
3. Max 2600W Zone
4. Max 1500W Zone
5. Max 2100W Zone
6.Control Panel

The Control Panel

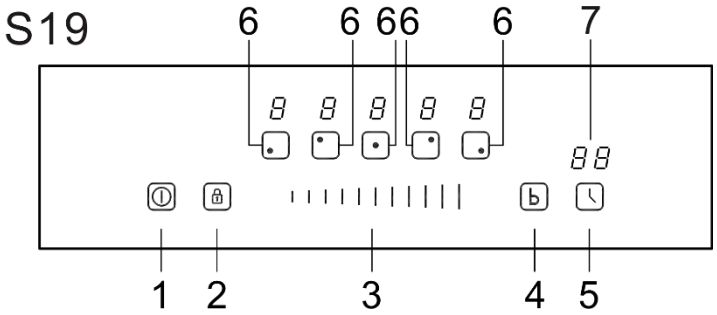

1.Turn ON/OFF
2.Child lock
3.Select power level
4.Boost control
5. Setting the timer
6.Select heating zone
7.Timer display

Instructions

No.	Reference	Description
1		ON/OFF: Turn on or turn off the machine.
2		CHILD LOCK: Press the button one time to lock. Other buttons will not operate when it is locked. Press and hold the button to unlock.
3		The booster function.
4		Timer: Setting the time as you need.
5		Select the bottom left up hob.
6		Select the top left up hob.
7		Select the middle hob.
8		Select the top right hob.
9		Select the bottom right hob.
10		Slide control: Increase or reduce the power level.
11		Display: It shows power level, error code and hob status.
12		Timer display.

USING YOUR APPLIANCE

To Start Cooking

After the power is turned on, the buzzer beeps once, all the indicators light up for 1 second then go out. This indicates that the hob has entered the state of standby mode.

1. Touch the ON/OFF switch, all the indicators show '—'. If you don't choose a heat setting within 1 minute, the induction hob will automatically switch off. *You will need to start again at step 1.*	
2. Place a suitable pan on the cooking zone that you wish to use. Make sure the bottom of the pan and the surface of the cooking zone is clean and dry.	
3. Touching the heating zone selection control, and an indicator next to the key will flash.	
4. Select a heat setting by touching the 'slider' control. You can modify the heat setting at any time during cooking.	Power down Power up

When you have Finished Cooking

1. Touch the heating zone selection that you wish to switch off.	
2. Turn the cooking zone off by touching the 'slider' control. Make sure the display shows '0'.	Power down
3. Turn the whole cooktop off by touching the ON/OFF control.	

4. Beware of hot surface 'H' will show which means cooking zone is too hot to touch. It will disappear when the surface has cooled down to a safe temperature. It can also be used as an energy saving function if you want to heat further pans, use the hotplate that is still hot.	

Using Boost Function

Activate the boost function 1. Select the zone with boost function. Touching the 'boost' key, then the display shows 'b'.	
Cancel boost function 1. Select the zone with boost function. 2. Touching the 'slider' control to cancel the Boost function and select the level you want to set. 3. Boost function can only last for 5 minutes, after that the zone will go to level 9 automatically.	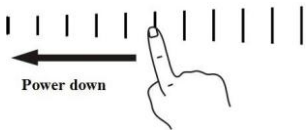

Using Child Lock Function

- You can lock the controls to prevent unintended use (for example children accidentally turning the cooking zones on).
- When the controls are locked, all the controls except the ON/OFF control are disabled.

To lock the controls 1. Touch the key lock control. 2. The timer indicator will show 'Lo'.	
To unlock the controls 1. Make sure the hob is turned on. 2. Touch and hold the key lock control for 3 seconds. 3. You can now start using your hob.	

When the hob is in lock mode, all the controls are disabled except the ON/OFF, you can always turn the hob off with the ON/OFF control in an emergency, but you shall unlock the hob first in the next operation.

Using the Timer

You can use the timer in two different ways:

- As a minute minder. In this case, the timer will not turn any cooking zone off when the set time is up.
- As a cut-off timer to turn one or more cooking zones off after time is up.
- You can set the timer up to 99 minutes.

Using the Timer as a Minute Minder

1. Make sure the cooktop is turned on, and you must set minute minder after cooking zone power setting finished (zone indication '●' is not blinking)	
2. Touch timer key, '10' will show in the timer display and '0' will blink.	
3. Set the time by touching the 'slider' control of timer.	03
4. Touch timer control again, then '1' will flash.	
5. Set the time by touching the 'slider' control.	93
6. When the timer is set, it will begin to count down immediately. The display will show the remaining time.	
7. Buzzer will beep for 30 seconds, and the timer indicator shows '- -' when the setting time finished.	- -

Using the Timer to Switch Off One or More Cooking Zones

1. Touching the heating zone selection control that you want to set the timer for.	6
2. Touch timer control, the '10' will show in the timer display, and the '0' flashes. Zone indication '●' is blinking.	
3. Set the time by touching the 'slider' control.	03
4. Touch timer control again, the '1' will flash.	
5. Set the time by touching the 'slider' control.	93

6. When the time is set, it will begin to count down immediately. The display will show the remaining time. NOTE: there will be a red dot in the right bottom corner of power level indication which indicating that zone is selected.	
7. When cooking timer expires, the corresponding cooking zone will be switch off automatically. NOTE: other cooking zones will keep operating if they are turned on previously.	

If the Timer is Set on More Than One Zone

1. When you set timer for several cooking zones, red dots of the relevant cooking zones are indicated. The timer display shows the min. timer. The dot of the corresponding zone blinks.	(set to 15 minutes) (set to 30 minutes)
2. Once the countdown timer expires, the corresponding zone will switch off. Then it will show the new min. timer, and the dot of corresponding zone will flash. NOTE: touch the heating zone selection control, the corresponding timer will be shown in the timer indicator.	

Cancelling the Timer

1. Touching the heating zone selection control that you want to cancel the timer.	
2. Touching the timer control, the indicator will flash.	
3. Touch the power selection control to set the timer to ‘00’, the timer is cancelled.	00

Auto Shutdown Protection

Auto shutdown is a safety protection function for your induction hob. This occurs whenever you forget to switch off a cooking zone. The default shutdown times are shown in the table below:

Power level	1	2	3	4	5	6	7	8	9
Default working time (hour)	8	8	8	4	4	4	2	2	2

When the pot is removed, the induction hob can stop heating immediately and the hob automatically switch off after 1 minute.

Residual Heating Warming

When the hob has been operating for some time, there will be some residual heat. The letter ‘H’ appears to warn you to keep away from it.

Heat Settings

The settings below are guidelines only. The exact setting will depend on several factors, including your cookware and the amount you are cooking. Experiment with the cooktop to find the settings that best suit you.

Heat setting	Suitable for
1 - 2	▪ delicate warming for small amounts of food ▪ melting chocolate, butter, and foods that burn quickly. ▪ gentle simmering ▪ slow warming
3 - 4	▪ reheating ▪ rapid simmering ▪ cooking rice
5 - 6	▪ pancakes
7 - 8	▪ sauteing ▪ cooking pasta
9	▪ stir-frying ▪ searing ▪ bringing soup to the boil ▪ boiling water

INSTALLATION

⚠ Installation of this appliance must only be undertaken by a licenced electrician.

- To avoid a hazard, this appliance must be installed according to these instructions for installation.
- This appliance is to be properly installed and earthed only by a suitably qualified person.
- This appliance should be connected to a circuit which incorporates an isolating switch providing full disconnection from the power supply.

Before Installation

- Ensure that the work surface is square and level, and no structural members interfere with space requirements.
- The work surface is made of a heat-resistant material. Be sure the thickness of the work surface is at least 30mm. please select heat-resistant work surface material to avoid larger deformation caused by the heat radiation from the hotplate.
- When installing, a minimum of 50mm space must be preserved around the hole.
- The installation must comply with all clearance requirements and applicable standards and regulations.
- If the hob is installed above an oven, the oven has a built-in cooling fan.
- When installing an oven in the cabinet (ambry) space below an induction cooktop, ensure both appliances are compatible and installed with proper clearance and ventilation.
- A suitable isolating switch providing full disconnection from the mains power supply is incorporated in the permanent wiring, mounted and positioned to comply with the local wiring rules and regulations.
- The isolating switch must be of an approved type and provide a 3 mm air gap contact separation in all poles (or in all active [phase] conductors if the local wiring rules allow for this variation of the requirements).
- The isolating switch will be easily accessible to the customer with the hob installed.
- The appliance must be installed in accordance with all local building regulations and laws.
- Heat-resistant and easy-to-clean finishes (such as ceramic tiles) are used for the wall surfaces surrounding the hob.
- If the hob is installed above a drawer or cupboard space, a thermal protection barrier is installed below the base of the hob.
- The power supply cable is not accessible through cupboard doors or drawers.
- There is adequate flow of air from outside the cabinetry to the base of the hob.
- The isolating switch is easily accessible by the customer.

Note: The safety distance between the hotplate and the overhead cupboards should be at least 760mm.
Ventilation requirements must be met when installing appliance.

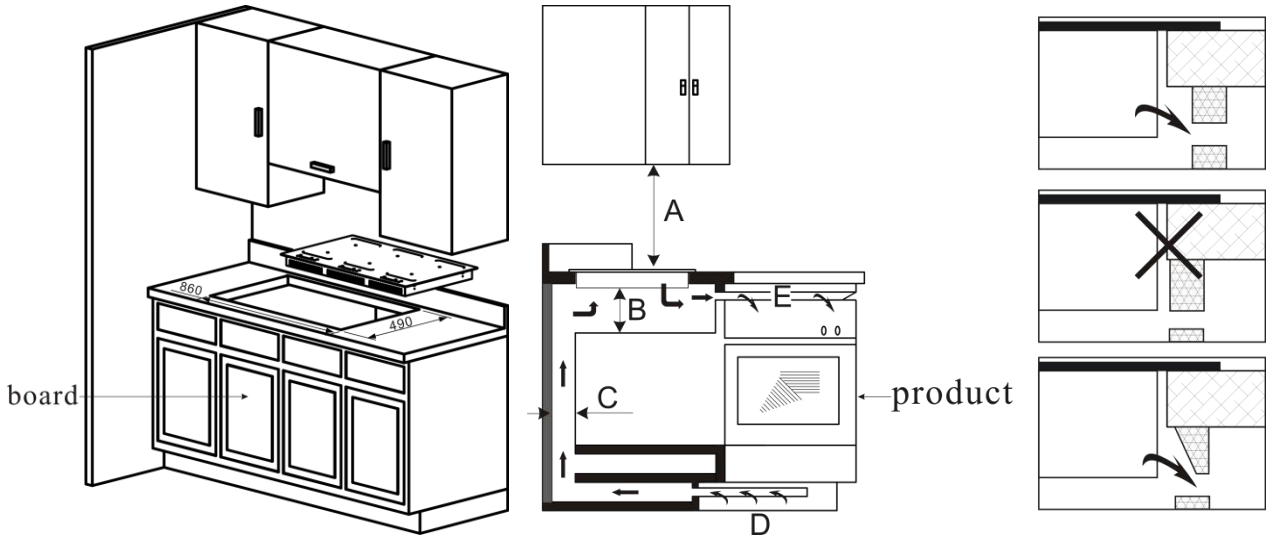

A (mm)	B (mm)	C (mm)	D	E
650-750	50 minimum	20 minimum	Air intake	Air exit 5mm

Installation

1. Cut out the work surface according to the sizes shown in the drawing.

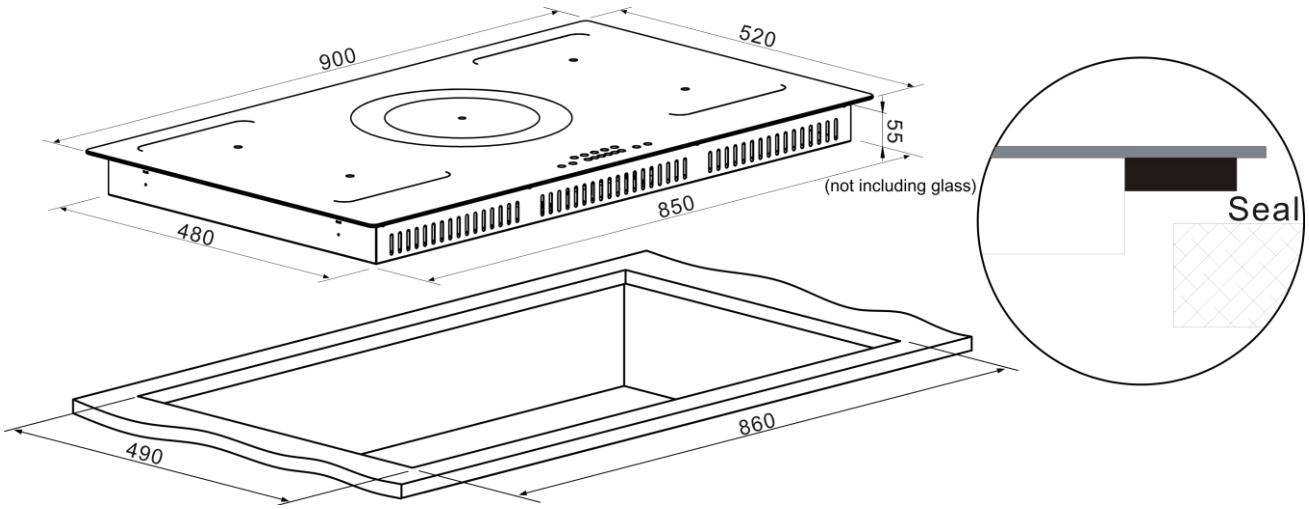

2. Put a towel or cloth on the work surface.
3. Place the hob face down on the protected surface.

4. Use the strip seal supplied, to seal it onto the work surface. Apply the seal to the edge of the bottom of the hob, leaving about 3mm from the edge of glass. Apply the seal all around the circumference. IMPORTANT: Do not use silicone.
5. Cut any excess and bring the two ends of the seal together so they match.

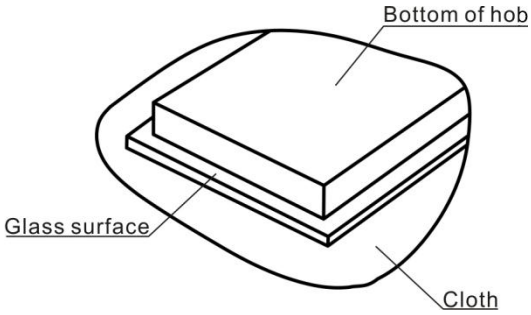

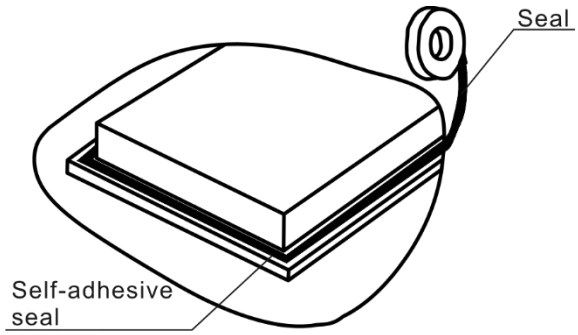

Before Locating the Fixing Brackets

The unit should be placed on a stable, smooth surface (use the packaging). Do not apply force onto the controls protruding from the hob.

Locating the Fixing Brackets

Fixing the hob on the work surface by screw four bracket on the bottom of hob (see picture) after installation.

Adjust the bracket position to suit for different work surface's thickness.

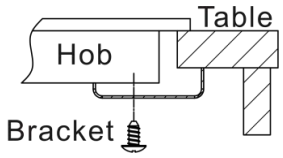

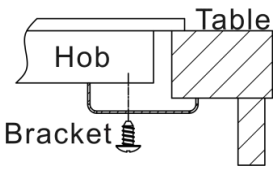

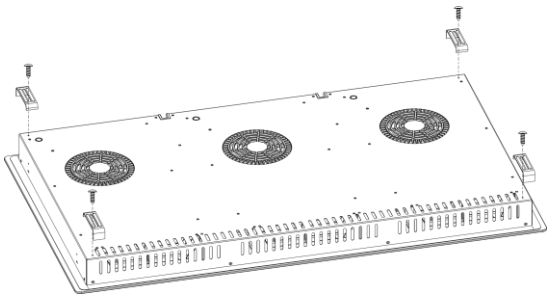

Cautions

- Do not mount the hob above cooling equipment, dishwashers and tumble dryers.
- The wall and induced heating zone above the work surface must withstand heat.
- To avoid any damage, the sandwich layer and adhesive must be resistant to heat.
- This appliance can only be connected to a supply with system impedance no more than 0.427 ohm.

Connecting the Appliance to the Mains Power Supply

This hob must be connected to the mains power supply only by a suitably qualified person. Before connecting the cooktop to the mains power supply, check that:

1. The domestic wiring system is suitable for the power drawn by the appliance.
2. The voltage corresponds to the value given in the rating plate.
3. The power supply cable sections can withstand the load specified on the rating plate. To connect the hob to the mains power supply, do not use adapters, reducers, or branching devices, as they can cause overheating and fire.

The power supply cable must not touch any hot parts and must be positioned so that its temperature will not exceed 75℃ at any point.

The domestic wiring system should be suitable for installation without alterations. Any alterations must only be made by a qualified electrician.

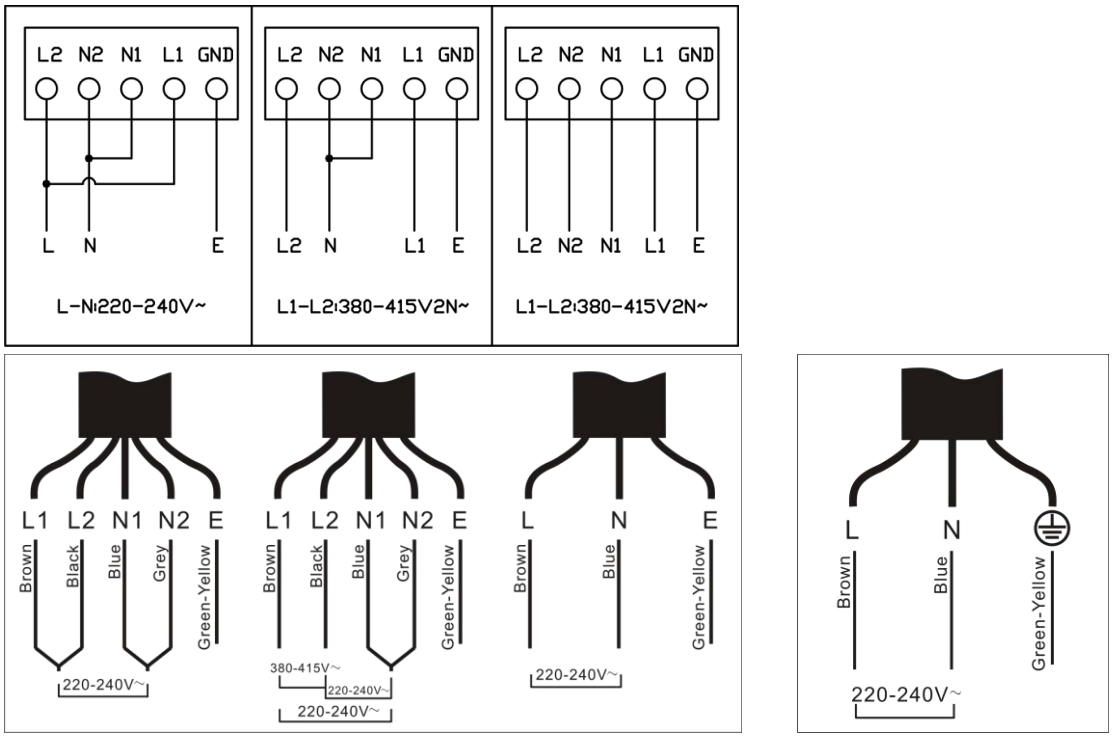

- If the cable is damaged or needs replacing, this should be undertaken by an authorised technician.
- If the appliance is being connected directly to the mains supply, an omni polar circuit-breaker must be installed with a minimum gap of 3mm between the contacts.
- The installer must ensure that the correct electrical connection has been made and that it complies with safety regulations.
- The cable must not be bent or compressed.
- The cable must be checked regularly and only replaced by a proper qualified person.

BEFORE USING THE APPLIANCE

- Read this guide, taking special note of the “Safety Instructions” section.
- Remove any protective film or packaging that may still be on your appliance.

Induction Cooking

Induction cooking is a safe, advanced, efficient, and economical cooking technology. It works by electromagnetic vibrations generating heat directly in the pan, rather than indirectly through heating the glass surface. The glass becomes hot only because the pan eventually warms it run.

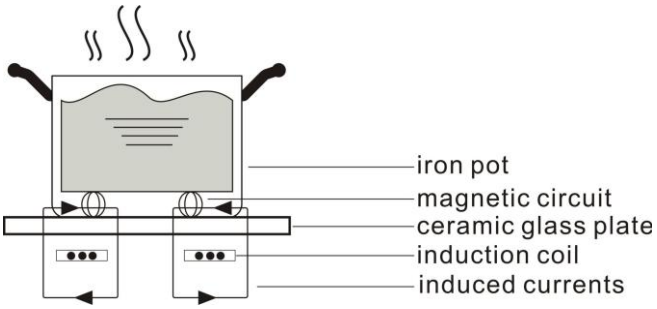

Using the Touch Controls

- The controls respond to touch, so you don’t need to apply any pressure.
- Use the ball of your finger, not its tip.
- You will hear a beep each time a touch is registered.
- Make sure the controls are always clean, dry, and that there is no object (e.g. a utensil or a cloth) covering them. Even a thin film of water may make the controls difficult to operate.

Choosing the Right Cookware

- Only use cookware with a base suitable for induction cooking. Look for the induction symbol on the packaging or on the bottom of the pan.
- You can check whether your cookware is suitable by carrying out a magnet test. Move a magnet towards the base of the pan. If it is attracted, the pan is suitable for induction.
- If you do not have a magnet:

1. Put some water in the pan you want to check.
2. Follow the steps under ‘To start cooking’.
3. If ‘E1’ does not flash in the display and the water is heating, then the pan is suitable.

- Cookware made by the following materials is not suitable: pure stainless steel, aluminium or copper without a magnetic base, glass, wood, porcelain, ceramic, and earthenware.

Size of burner (diameter/mm)	The minimum cookware (diameter/mm)
160	120
180	140
210	160

- The pots and pans must be placed precisely in the middle of the cooking area.
- In some cooking areas an internal diameter is indicated, with a lighter outline, which advises the user to go to a smaller cooking area, if available, with smaller diameter pan. This is to obtain optimum performance and efficiency. You can however use pans with smaller diameters than this limit.

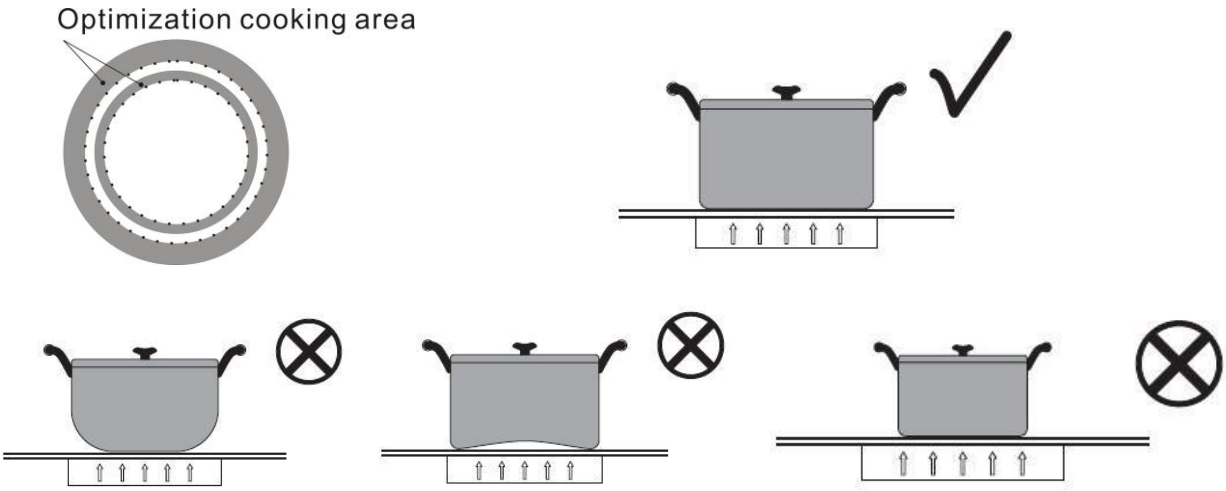

CLEANING & MAINTENANCE

⚠ WARNING! Cleaning & maintenance must only be carried out when the cooktop is cooled down to avoid burns.

- After every use, wipe the appliance over with a damp cloth then, dry the appliance by rubbing the surface with a clean cloth.
- Any residues that are left on the cooktop top surface from cleaning agents will damage it. You should remove any residues with warm water mixed with a little washing up liquid.
- For stubborn deposits use hot water to soften prior to cleaning.
- Abrasive cleaners or sharp objects will damage the hob surface; you should clean it using warm water mixed with a little washing up liquid.
- Ensure the heating plate is clean before use, a soiled zone does not transfer heat efficiently.
- DO NOT use a steam cleaner to clean the cooktop.

What?	How?	Important!
Everyday soiling on glass (fingerprints, marks, stains left by food or non-sugary spillovers on the glass)	• Switch the power to the cooktop off. • Apply a cooktop cleaner while the glass is still warm (but not hot!) • Rinse and wipe dry with a clean cloth or paper towel. • Turn power back on.	• When the power to the cooktop is switched off, there will be 'no hot surface' indication but the cooking zone may still be hot! • Heavy-duty scourers, some nylon scourers and harsh/ abrasive cleaning agents may scratch the glass. Always read the label to check if your cleaner or scourer is suitable. • Never leave cleaning residue on the cooktop: the glass may become stained.
Boilovers, melts, and hot sugary spills on the glass	Remove these immediately with a fish slice, palette knife or razor blade scraper suitable for induction glass cooktops, but beware of hot cooking zone surfaces: 1. Switch the power to the cooktop off. 2. Hold the blade or utensil at a 30°angle and scrape the soiling or spill to a cool area of the cooktop. 3. Clean the soiling or spill up with a dish cloth or paper towel. 4. Turn power back on	• Remove stains left by melts and sugary food or spillovers as soon as possible. If left to cool on the glass, they may be difficult to remove or even permanently damage the glass surface. • Cut hazard: when the safety cover is retracted, the blade in a scraper is razor-sharp. • Use with extreme care and always store safely and out of reach of children. • Follow steps 2 to 4 for 'Everyday soiling on glass'.

Spillovers on the touch control	1. Turn off power. 2. Soak up the spill. 3. Wipe the touch control area with a clean damp sponge or cloth. 4. Wipe the area completely dry with a paper towel. 5. Turn back on.	• The cooktop may beep and turn itself off, and the touch controls may not function while there is liquid on them. • Make sure you wipe the touch control area dry before turning the cooktop back on.

⚠ WARNING! Cleaning & maintenance must only be carried out when the cooktop is cooled down to avoid burns.

- CAUTION: The appliance should be disconnected from your mains supply before commencing any maintenance.
- IMPORTANT: If your appliance appears not to be operating correctly, please discontinue use, and contact your appliance dealer.
- If the cooktop is damaged, switch off the appliance and disconnect it from the power supply.
- Any electrical repairs to this appliance must conform to your local, state and federal regulations.
- Any modifications or use of this appliance for any other purpose or in any other environment than intended will void warranty.
- Repairs may only be carried out by Service Engineers or an authorised service agent.
- Do not attempt to repair the appliance yourself.

Please note that if an engineer is asked to attend whilst the product is under guarantee and finds that the problem is not the result of an appliance fault, then you may be liable for the cost of the call out charge.

The appliance must be accessible for the engineer to perform any necessary repair. If your appliance is installed in such a way that an engineer is concerned that damage will be caused to the appliance or your kitchen, then they will not complete a repair.

TROUBLESHOOTING

If you are experiencing any issues with your appliance, we recommended utilising below table to troubleshooting.

- IMPORTANT: If your appliance appears not to be operating correctly, please discontinue use, and contact your appliance dealer.
- If the cooktop is damaged, switch off the appliance and disconnect it from the power supply.

Problem	Possible causes	What to do
The cooktop cannot be turned on.	No power.	Make sure the cooktop is connected to the power supply and that it is switched on. Check whether there is a power outage in your home or area. If you've checked everything and the problem persists, call a qualified technician.
The touch controls are unresponsive.	The controls are locked.	Unlock the controls. See section 'Using the hob' for instructions.
The touch controls are difficult to operate.	There may be a slight film of water over the controls or you may be using the tip of your finger when touching the controls.	Make sure the touch control area is dry and use the ball of your finger when touching the controls.
The glass is being scratched.	Rough-edge cookware. Unsuitable, abrasive scourer or cleaning products being used.	Use cookware with flat and smooth bases. See 'Choosing the right cookware'. See 'Cleaning & Maintenance'
Some pans make crackling or clicking noises.	This may be caused by the construction of your cookware (layers of different metals vibrating differently).	This is normal for cookware and does not indicate a fault.
The induction hob makes a low humming noise when used on a high heat setting.	This is caused by the technology of induction cooking.	This is normal, but the noise should quieten down or disappear completely when you decrease the heat setting.
Fan noise coming from the induction hob.	A cooling fan built into your induction hob has come on to prevent the electronics from overheating. It may continue to run even after you've turned the induction hob off.	This is normal and needs no action. Do not switch the power to the induction hob off at the wall while the fan is running.

Pans do not become hot and appears in the display.	The induction hob cannot detect the pan because it is not suitable for induction cooking. The induction hob cannot detect the pan because it is too small for the cooking zone or not properly centred on it.	Use cookware suitable for induction cooking. See section 'Choosing the right cookware'. Centre the pan and make sure that its base matches the size of the cooking zone.
The induction hob or a cooking zone has turned itself off unexpectedly, a tone sounds or an error code is displayed.	Technical fault.	Please note down the error letters and numbers, switch the power to the induction hob off at the wall, and contact a qualified technician.

In the event of a technical fault, the induction cooktop will enter the protective state automatically and display corresponding protective codes displayed in the following table.

Fault Code	Possible Cause	Description
E1	Pan or pot fault	No pan or pot, or their size, material, etc. is not suitable, or not placed precisely in the middle of the cooking area.
E2	Voltage is too high	Higher than AC 265V.
E3	Voltage is too low	Lower than AC 185V.
E4	IGBT sensor open-circuit	When the IGBT sensor detects an open-circuit, the IGBT sensor stops working.
E5	IGBT sensor short-circuit	When the IGBT sensor detects an short-circuit, the IGBT sensor stops working.
E6	IGBT sensor over temperature	IGBT reaches 100±5℃ for 3s (It can recover automatically when temperature decrease 50℃ -70℃).
E7	Hob surface sensor open-circuit	After 60 seconds of operation, IGBT stops working when the temperature detection circuit of pot has detected an open-circuit.
E8	Hob surface sensor short-circuit	IGBT stops working when the temperature detection circuit of pot has detected an short-circuit.
E9	High temperature protection of pot sensor	IGBT stops working when the temperature detection circuit of the pot is detected to exceed a certain value.

EA	Pot sensor removal or failure protection	When the pot sensor is moved out, and the whole machine is heated for a period of time, the corresponding area will detect the moving out state of the cooker sensor, and the heating area will stop heating.
EB	Communication fault	The power board does not receive a valid communication signal from the display board for 90 seconds.
EC	Communication fault	The display board does not receive a valid communication signal from the power board for 90 seconds.
H	Hob surface is of high temperature.	After the hob is off, if the hob surface temperature is too high, it will display "H", and the fan will delay working for 2 minutes.

The above are the judgment and inspection of common failures.
Please do not disassemble the unit by yourself to avoid any dangers and damages to the induction hob.

TECHNICAL SPECIFICATION

Model Number	SCI-4155B
Cooking Zones	5
Zones Power	2x 1500W, 2x 2100W, 1x 2600W
Rated Voltage	220-240V~ 50/60Hz
Max Rated Inputs (Total Power)	9800W
Product Size W x D x H (mm)	900 × 520 × 60
Cutout Dimensions A x B (mm)	870 × 490
Power consumption off mode:	＜0.5W
Time after which the equipment reaches automatically off mode:	＜20 min

Due to continuous improvements to our models, specifications may change without notice and differ from the listed specifications in this document. For the most accurate specifications please check physical product specifications & rating labels.

DECLARATION OF CONFORMITY

Australian Standards

This product has been designed and manufactured to comply with all relevant Australian and New Zealand Standards.

AS/NZS 60335.1 General Requirements for Domestic Electrical Appliances

AS/NZS 60335.2.6 Specific Requirements for Domestic Electrical Cooking Appliances

This appliance is SAA certified.

Installation of the appliance must only be undertaken by a licensed electrician who can provide a compliance certificate.

This appliance is intended for domestic use only.

Disposal

Do not dispose of electrical appliances as unsorted municipal waste, use appropriate collection facilities. Contact your local council for information regarding collection systems available.

Copyright (C) SALINI Appliances 2026. All rights reserved.
The product specifications in this booklet apply to the specific products and models described at the date of issue, these specifications or recommendations may change at any time. You should check with your Dealer for the latest issue, or visit our website for more information.

SALINI